Data sheet

RP02502IBWC (Type 007), 2-pole

P/N 31007102

2026/11/10
Version: C

Illustrations

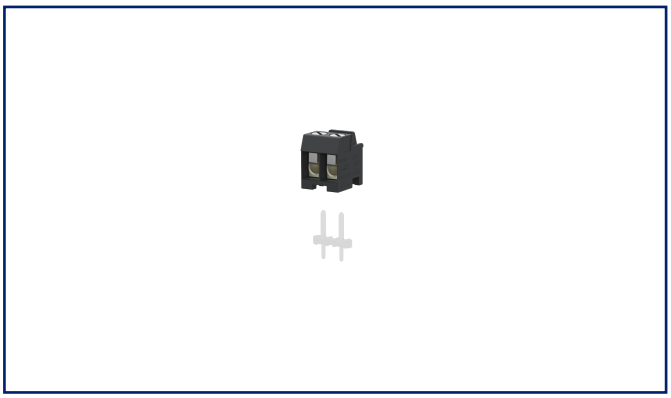

Dimensional drawing as an example

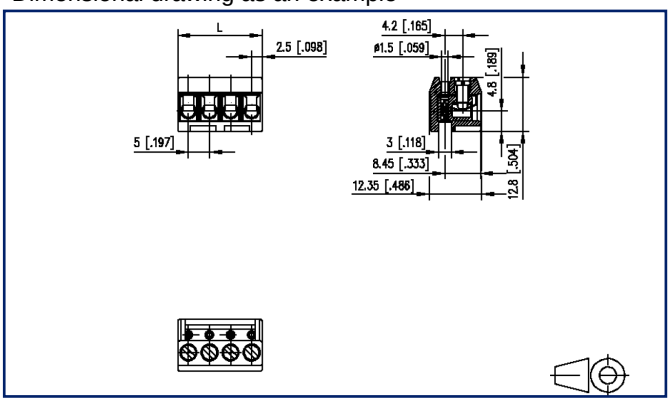

See enlarged drawings at the end of document

Product specification

- screw type terminal block, pluggable
- centerline 5.00 mm, direction of connection 90°
- wire protector, fittable without loss of poles
- color black
- wire entry perpendicular to plug direction, lamella

METZ CONNECT GmbH | Im Tal 2 | 78176 Blumberg | Germany
Phone +49 7702 533-0 | Fax +49 7702 533-433 | info@metz-connect.com
Weitere Dokumentation siehe / additional documentation see / documentation supplémentaire voir www.metz-connect.com

© 2026 METZ CONNECT - Technische Änderungen vorbehalten! Subject to modifications! Sous réserve de modifications techniques!

Technical Data

General Data			
Tightening torque SEV	0.5 Nm		
Tightening torque UL	4.4 lb-in		
pole size	2		
Insulating material class	CTI 600		
clearance/creepage dist.	2.3 mm		
Protection category	IP20 with wire connected		
Insul. strip length	6 mm		
Rated current	10 A		
Overvoltage category	III	III	II
Pollution degree	3	2	2
Rated voltage	100 V	320 V	320 V
Rated test voltage	2.5 kV	2.5 kV	2.5 kV
Terminal data			
rat.wiring solid AWGmax	0.33 mm² - 2.5 mm² / AWG 22 - AWG 12		
rat.wiring strand.AWGmax	0.33 mm² - 2.5 mm² / AWG 22 - AWG 12		
Approvals			
extended wiring UL	Wire range extended to No. 30 AWG for factory-wiring. Two same size wires No. 22-16 AWG Cu, Sol/Str for field-wiring; No. 30-16 AWG Cu Sol/Str factory-wiring.		
c UL us V / A / AWG	300 / 15 / 22 - 12		
approval UL - File No.	E121004		
SEV	250 V / 2.5 kV / 10 A		
Material			
insulating material	PA66		
flammability class	V0		
contact material	CuBe		
Contact surface	Ni + Ag		
terminal body thread	M3		
terminal body material	CuZnPb		
terminal body surface	Cu + Ni		
screw thread	M3		

© 2026 METZ CONNECT - Technische Änderungen vorbehalten! Subject to modifications! Sous réserve de modifications techniques!

Technical Data

screw material	8,8
screw surface	Zn Cr(VI)-frei/free
wire protector material	CuSn
wire protector surface	Sn
Glow-Wire Flammability GWFI	850 °C acc. to IEC 60695-2-12
Glow-Wire Flammability GWIT	775 °C acc. to IEC 60695-2-13
Climatic Data	
upper limit temperature	105 °C
lower limit temperature	-40 °C
general	
Tolerance	ISO 2768 -mH

Application note

This product is a standard product of METZ CONNECT. METZ CONNECT is not aware of the specific intended use of the goods by the Customer or any customers of the Customer. The Customer guarantees that it has fully and sufficiently tested the use of the goods and any product modifications, product changes or product enhancements with regard to the specific intended use in accordance with the state of the art or in any other way.

© 2026 METZ CONNECT - Technische Änderungen vorbehalten! Subject to modifications! Sous réserve de modifications techniques!

Accessories

P/N	Designation
710084	Mounting flange right for type 07, 08
710085	Mounting flange left for type 07, 08
710121-2	Coding pin short for type 007
710122-2	Coding pin long for type 007
716846	Coding comb pastel blue

© 2026 METZ CONNECT - Technische Änderungen vorbehalten! Subject to modifications! Sous réserve de modifications techniques!

Counterpart

P/N	Designation
310171	PR015xxVBHC Type 017
31017102	PR01502VBHC Type 017
310271	PR015xxVBVC (Type 027)
31027102	PR01502VBVC (Type 027)
310391	PT055xxHBHC Type 039
310411	PT065xxVBEN Type 041
31041102	PT06502VBEN (Type 041), 2-pole
310421	PT065xxVBVN Type 042
314171	PM035xxVBHC (Type 417)
3141710222	PM03502VBHC (Type 417)

© 2026 METZ CONNECT - Technische Änderungen vorbehalten! Subject to modifications! Sous réserve de modifications techniques!

Illustrations

Dimensional drawing as an example

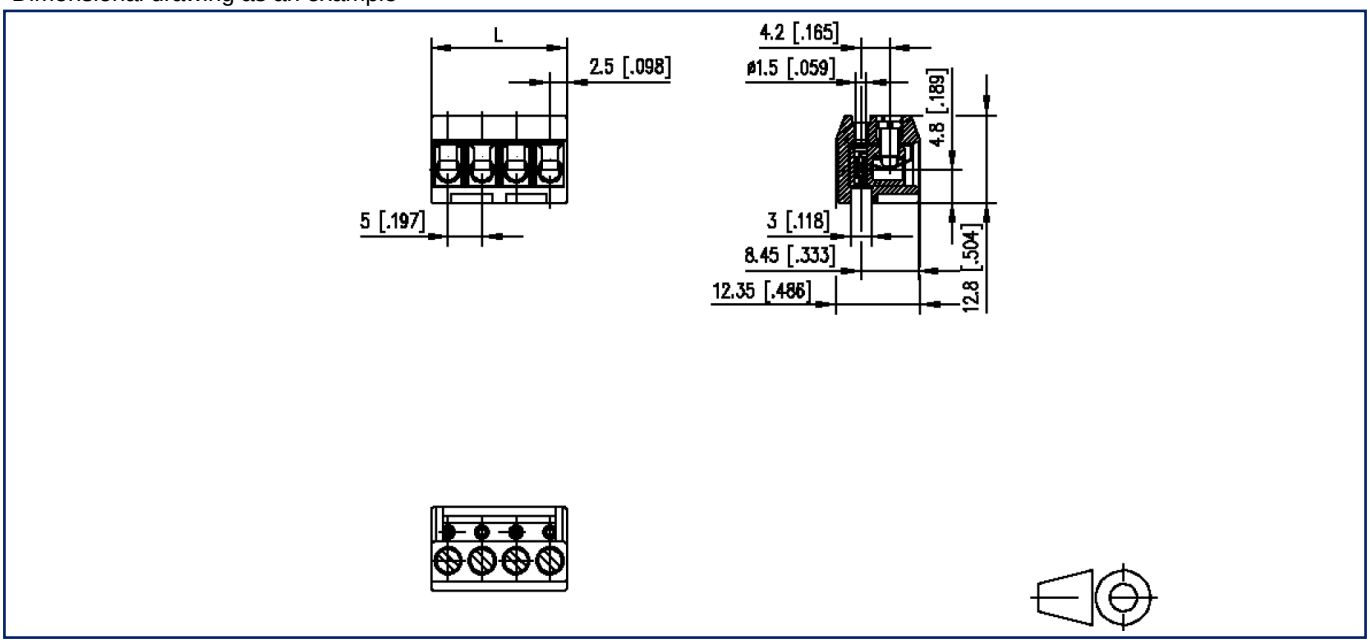

L=(pole size - 1) x centerline + 5 mm [0.197]

© 2026 METZ CONNECT - Technische Änderungen vorbehalten! Subject to modifications! Sous réserve de modifications techniques!