Data sheet

RP09508RBWC Type 157 with clip system

P/N 31157108

2026/11/10
Version: G

Illustrations

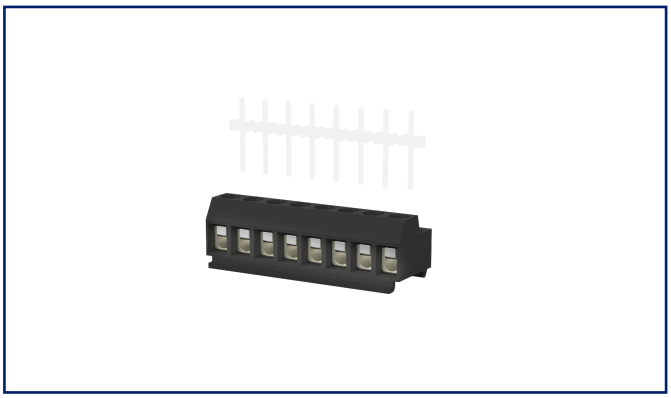

Dimensional drawing as an example

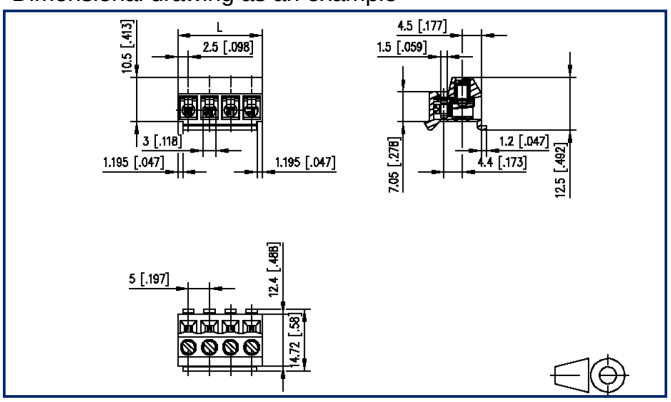

See enlarged drawings at the end of document

Product specification

- screw type terminal block, pluggable
- centerline 5.00 mm, direction of connection 90°
- wire protector, fittable without loss of poles
- color black
- pluggable, top side pin insertion, snap-in technique for mounting into a housing

METZ CONNECT GmbH | Im Tal 2 | 78176 Blumberg | Germany
Phone +49 7702 533-0 | Fax +49 7702 533-433 | info@metz-connect.com
Weitere Dokumentation siehe / additional documentation see / documentation supplémentaire voir www.metz-connect.com

© 2026 METZ CONNECT - Technische Änderungen vorbehalten! Subject to modifications! Sous réserve de modifications techniques!

Technical Data

General Data			
Tightening torque SEV	0.5 Nm		
Tightening torque UL	4.4 lb-in		
pole size	8		
Insulating material class	CTI 600		
clearance/creepage dist.	4.15 mm		
Protection category	IP20 with wire connected		
Insul. strip length	6 mm		
Rated current	13.5 A		
Overvoltage category	III	III	II
Pollution degree	3	2	2
Rated voltage	63 V	320 V	320 V
Rated test voltage	2.5 kV	2.5 kV	2.5 kV
Terminal data			
rat.wiring solid AWGmax	0.08 mm² - 2.5 mm² / AWG 28 - AWG 14		
rat.wiring strand.AWGmax	0.08 mm² - 2.5 mm² / AWG 28 - AWG 14		
Approvals			
c UL us V / A / AWG	300 / 5 / 28 - 14		
approval UL - File No.	E121004		
SEV	250 V / 4 kV / 13.5 A		
Material			
insulating material	PA66		
flammability class	V0		
contact material	CuSn		
Contact surface	Sn		
terminal body thread	M3		
terminal body material	CuZnPb		
terminal body surface	Ni		
screw thread	M3		
screw material	8,8		
screw surface	Zn Cr(VI)-frei/free		

© 2026 METZ CONNECT - Technische Änderungen vorbehalten! Subject to modifications! Sous réserve de modifications techniques!

Technical Data

wire protector material	CuSn
wire protector surface	Sn
Glow-Wire Flammability GWFI	850 °C acc. to IEC 60695-2-12
Glow-Wire Flammability GWIT	775 °C acc. to IEC 60695-2-13
Climatic Data	
upper limit temperature	105 °C
lower limit temperature	-40 °C
general	
Tolerance	ISO 2768 -mH

Application note

This product is a standard product of METZ CONNECT. METZ CONNECT is not aware of the specific intended use of the goods by the Customer or any customers of the Customer. The Customer guarantees that it has fully and sufficiently tested the use of the goods and any product modifications, product changes or product enhancements with regard to the specific intended use in accordance with the state of the art or in any other way.

© 2026 METZ CONNECT - Technische Änderungen vorbehalten! Subject to modifications! Sous réserve de modifications techniques!

Counterpart

P/N	Designation
310461	PR035xxVBHC (Type 046)
31046108	PR03508VBHC (Type 046)
313171	PM015xxVBHC Type 317
313181	PM025xxVBHC Type 318

© 2026 METZ CONNECT - Technische Änderungen vorbehalten! Subject to modifications! Sous réserve de modifications techniques!

Illustrations

Dimensional drawing as an example

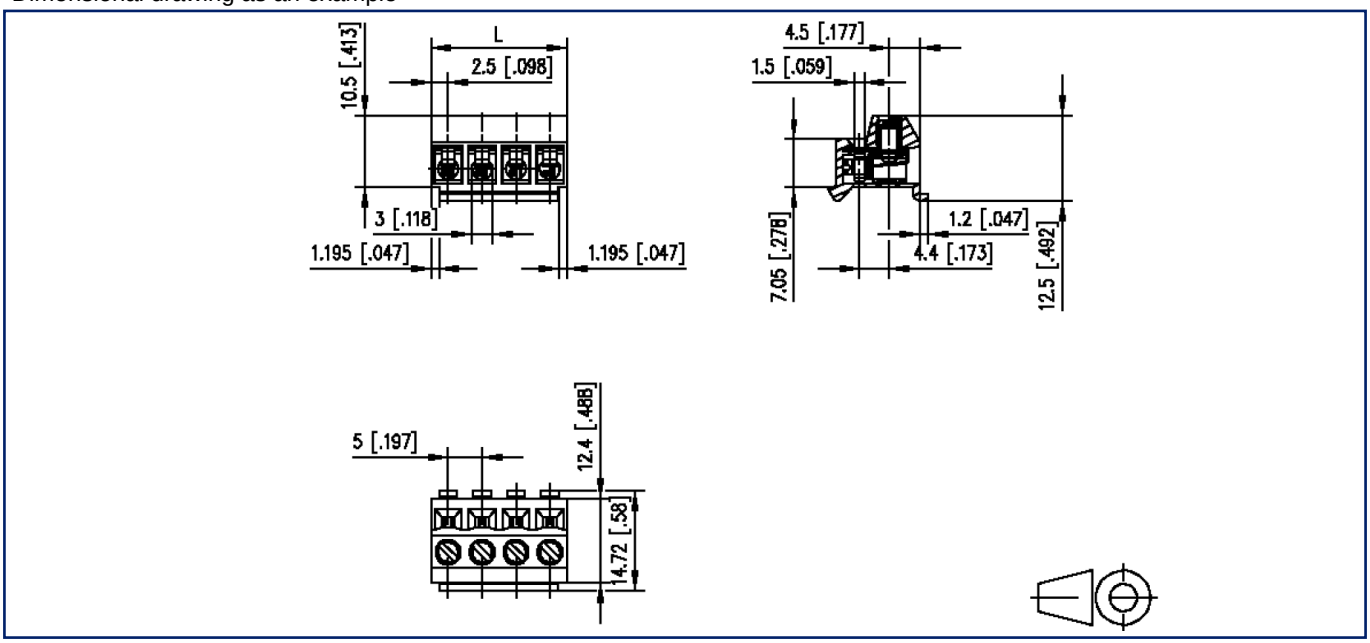

L=(pole size - 1) x centerline + 5 mm [0.197]

© 2026 METZ CONNECT - Technische Änderungen vorbehalten! Subject to modifications! Sous réserve de modifications techniques!

Illustrations

Application example

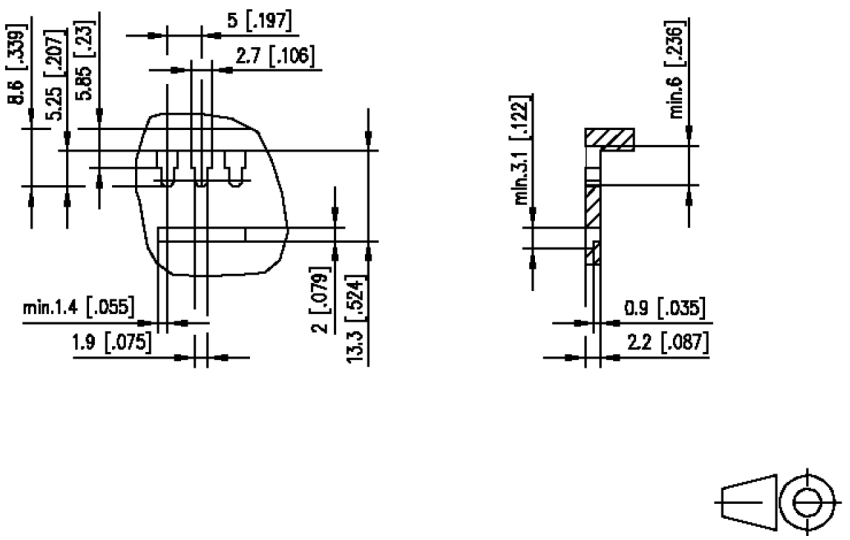

© 2026 METZ CONNECT - Technische Änderungen vorbehalten! Subject to modifications! Sous réserve de modifications techniques!