Data sheet
RP01305VBWN Type 169

P/N 31169105

2026/11/10
Version: A

Illustrations

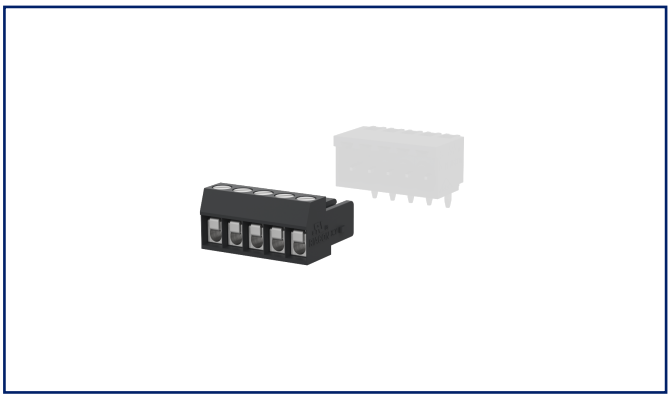

Dimensional drawing as an example

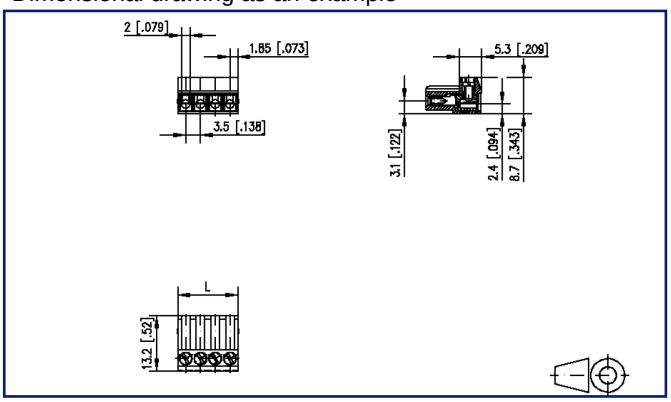

See enlarged drawings at the end of document

Product specification

- screw type terminal block, pluggable
- centerline 3.50 mm, direction of connection vertical 0°
- wire protector
- color black
- wire entry codeable side perpendicular to plug direction

METZ CONNECT GmbH | Im Tal 2 | 78176 Blumberg | Germany
Phone +49 7702 533-0 | Fax +49 7702 533-433 | info@metz-connect.com
Weitere Dokumentation siehe / additional documentation see / documentation supplémentaire voir www.metz-connect.com

© 2026 METZ CONNECT - Technische Änderungen vorbehalten! Subject to modifications! Sous réserve de modifications techniques!

Technical Data

General Data			
Tightening torque SEV	0.15 Nm		
Tightening torque UL	1.3 lb-in		
pole size	5		
Insulating material class	CTI 600		
clearance/creepage dist.	2 mm		
Protection category	IP20 with wire connected		
Insul. strip length	5 mm		
Rated current	5 A		
Overvoltage category	III	III	II
Pollution degree	3	2	2
Rated voltage	32 V	250 V	250 V
Rated test voltage	2.5 kV	2.5 kV	2.5 kV
Terminal data			
rat.wiring solid AWGmax	0.08 mm² - 1.5 mm² / AWG 28 - AWG 16		
rat.wiring strand.AWGmax	0.08 mm² - 1 mm² / AWG 28 - AWG 16		
Approvals			
c UL us V / A / AWG	150 / 10 / 28 - 16		
approval UL - File No.	E121004		
SEV	125 V / 2.5 kV / 5 A		
Material			
insulating material	PA66		
flammability class	V0		
contact material	CuNiZn		
terminal body thread	M2		
terminal body material	CuZnPb		
terminal body surface	Cu + Ni		
screw thread	M2		
screw material	8,8		
screw surface	Zn Cr(VI)-frei/free		
wire protector material	CuNiZn		

© 2026 METZ CONNECT - Technische Änderungen vorbehalten! Subject to modifications! Sous réserve de modifications techniques!

Technical Data

Glow-Wire Flammability GWFI	960 °C acc. to IEC 60695-2-12
Glow-Wire Flammability GWIT	775 °C acc. to IEC 60695-2-13
Climatic Data	
upper limit temperature	105 °C
lower limit temperature	-40 °C
general	
Tolerance	ISO 2768 -mH

Application note

This product is a standard product of METZ CONNECT. METZ CONNECT is not aware of the specific intended use of the goods by the Customer or any customers of the Customer. The Customer guarantees that it has fully and sufficiently tested the use of the goods and any product modifications, product changes or product enhancements with regard to the specific intended use in accordance with the state of the art or in any other way.

© 2026 METZ CONNECT - Technische Änderungen vorbehalten! Subject to modifications! Sous réserve de modifications techniques!

Accessories

P/N	Designation
720243-01-3	Coding star orange
720243-02-4	Coding star gray

© 2026 METZ CONNECT - Technische Änderungen vorbehalten! Subject to modifications! Sous réserve de modifications techniques!

Counterpart

P/N	Designation
311801	PT013xxHBBN Typ 180
311811	PT013xxVBBN Typ 181
311821	PT113xxHBBN Type 182
311831	PT113xxVBBN Type 183
311861	PT123xxHDBN Typ 186
311871	Typ 187 PT123 xxVDBO

© 2026 METZ CONNECT - Technische Änderungen vorbehalten! Subject to modifications! Sous réserve de modifications techniques!

Illustrations

Dimensional drawing as an example

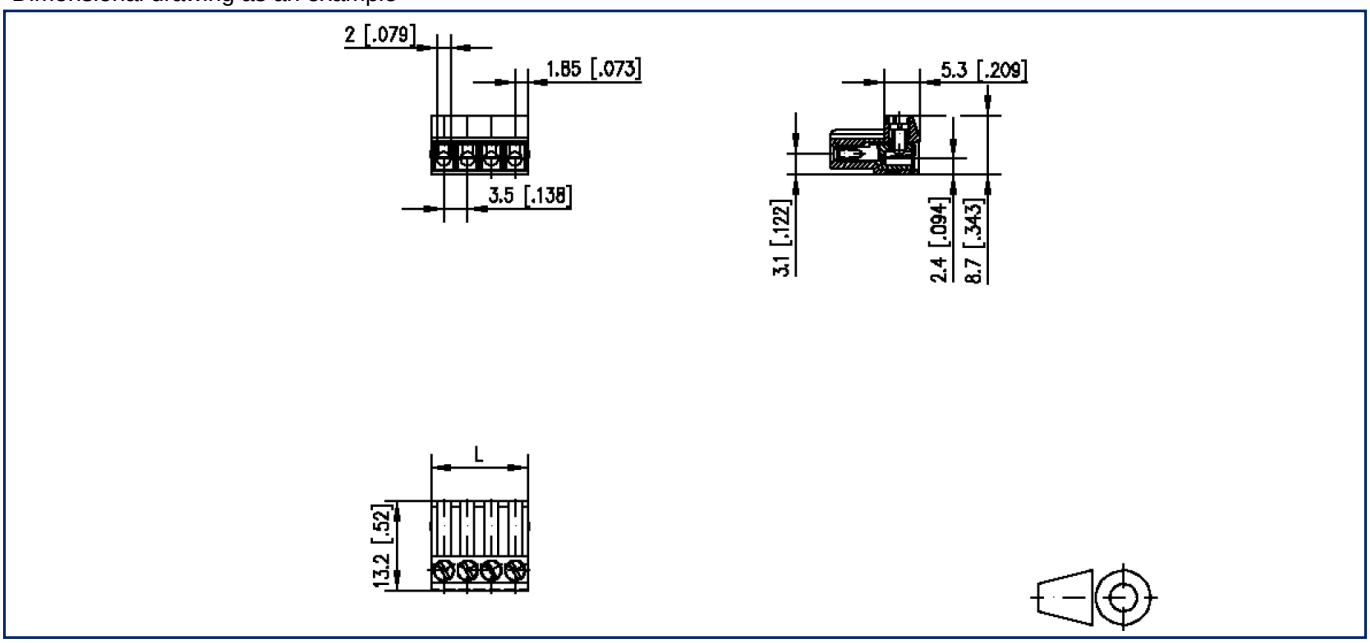

L=(pole size - 1) x centerline + 3.7 mm [0.146]

© 2026 METZ CONNECT - Technische Änderungen vorbehalten! Subject to modifications! Sous réserve de modifications techniques!