Data sheet

PT11606HBBN (Type 230)

P/N
31230106

2026/09/07

Illustrations

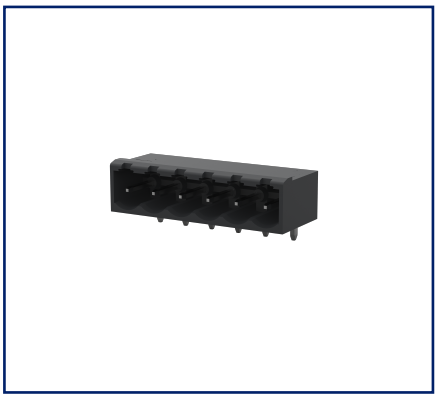

Dimensional drawing as an example

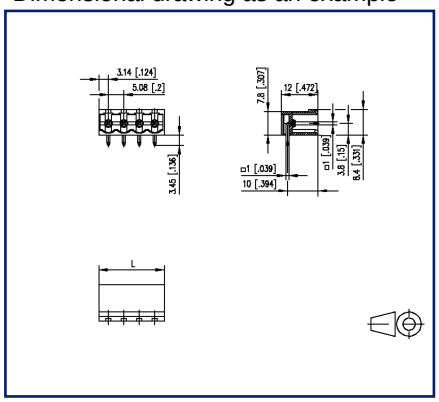

Drill pattern as an example

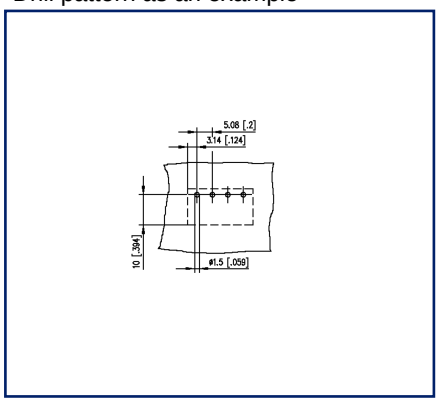

See enlarged drawings at the end of document

Product specification

- pin header, solderable
- centerline 5.08 mm, direction of connection 90°
- closed ends
- color black
- codeable

METZ CONNECT GmbH | Im Tal 2 | 78176 Blumberg | Germany
Phone +49 7702 533-0 | Fax +49 7702 533-433 | info@metz-connect.com

© 2026 METZ CONNECT - Technische Änderungen vorbehalten! Subject to modifications! Sous réserve de modifications techniques!

Data sheet
PT11606HBBN (Type 230)

P/N
31230106

2026/09/07

Technical Data

General Data			
Solder pin length	3.45 mm		
pole size	6		
Insulating material class	CTI 600		
clearance/creepage dist.	4.08 mm		
Protection category	IP00		
Rated current	13.5 A		
Overvoltage category	III	III	II
Pollution degree	3	2	2
Rated voltage	320 V	800 V	800 V
Rated test voltage	6 kV	6 kV	6 kV
Approvals			
c UL us V / A	300 / 15		
approval UL - File No.	E121004		
SEV	320 V / 4 kV / 13.5 A / 1.0 x 1.0 mm		
Material			
insulating material	PA66		
flammability class	V0		
contact pin material	CuFe		
contact pin surface	Ni + Ag		
Glow-Wire Flammability GWFI	960 °C acc. to IEC 60695-2-12		
Glow-Wire Flammability GWIT	775 °C acc. to IEC 60695-2-13		
Climatic Data			
upper limit temperature	105 °C		
lower limit temperature	-40 °C		
general			
Tolerance	ISO 2768 -mH		
Solderability	Acc. to JEDEC JESD22-B102E 245°C/5s		
Application note			

© 2026 METZ CONNECT - Technische Änderungen vorbehalten! Subject to modifications! Sous réserve de modifications techniques!

Technical Data

This product is a standard product of METZ CONNECT. METZ CONNECT is not aware of the specific intended use of the goods by the Customer or any customers of the Customer. The Customer guarantees that it has fully and sufficiently tested the use of the goods and any product modifications, product changes or product enhancements with regard to the specific intended use in accordance with the state of the art or in any other way.

© 2026 METZ CONNECT - Technische Änderungen vorbehalten! Subject to modifications! Sous réserve de modifications techniques!

Accessories

P/N	Designation
700024-01-9	Coding star white

© 2026 METZ CONNECT - Technische Änderungen vorbehalten! Subject to modifications! Sous réserve de modifications techniques!

Counterpart of

P/N	Designation
31249106	RP01606VBLC Type 249
ASP0460622	SP04606VBNC ASP046

© 2026 METZ CONNECT - Technische Änderungen vorbehalten! Subject to modifications! Sous réserve de modifications techniques!

Illustrations

Dimensional drawing as an example

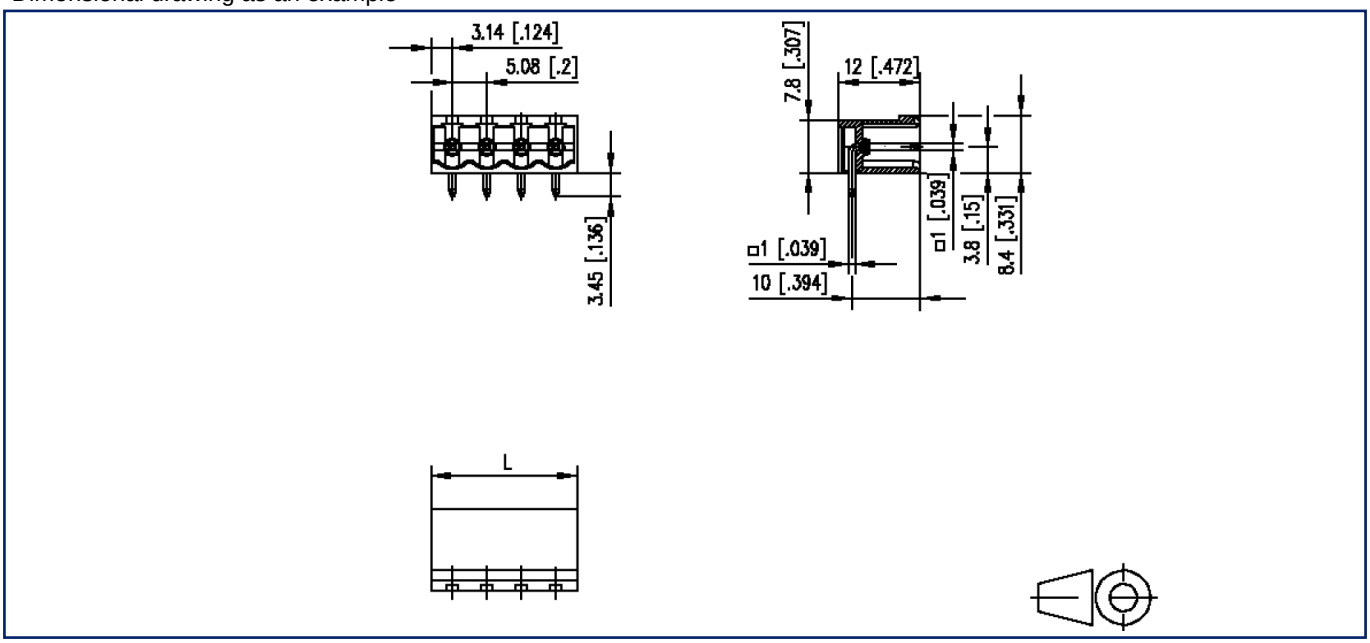

L=(pole size - 1) x centerline + 6.28 mm [0.247]

© 2026 METZ CONNECT - Technische Änderungen vorbehalten! Subject to modifications! Sous réserve de modifications techniques!

Illustrations

Drill pattern as an example

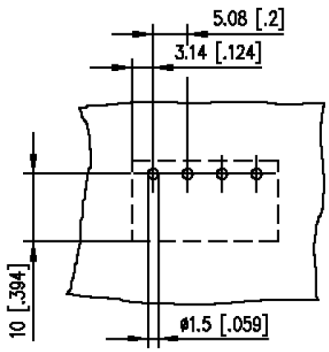

© 2026 METZ CONNECT - Technische Änderungen vorbehalten! Subject to modifications! Sous réserve de modifications techniques!