Data sheet

PT115xxVBBN Type 320

P/N
313201xx
xx=number of poles
2026/11/13

Illustrations

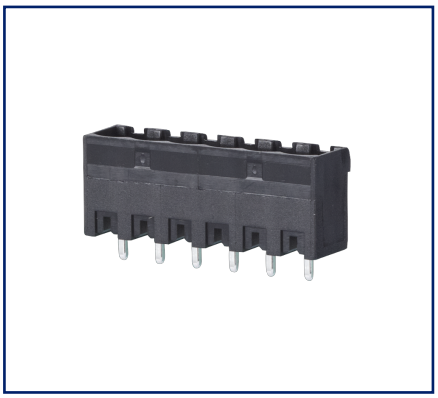

Dimensional drawing as an example

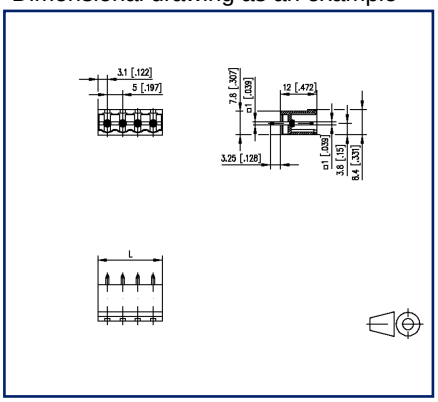

Drill pattern as an example

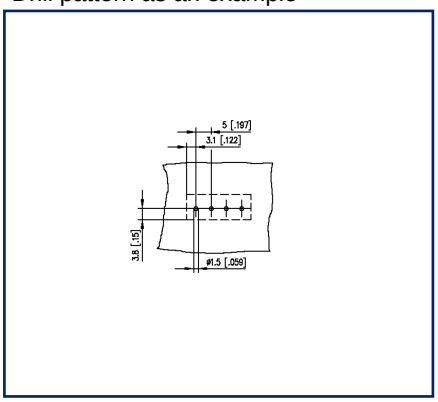

See enlarged drawings at the end of document

Product specification

- pin header, solderable
- centerline 5.00 mm, direction of connection vertical 0°
- closed ends
- color black
- codeable
- discontinued as of December 31, 2026

© 2026 METZ CONNECT - Technische Änderungen vorbehalten! Subject to modifications! Sous réserve de modifications techniques!

METZ CONNECT GmbH | Im Tal 2 | 78176 Blumberg | Germany
Phone +49 7702 533-0 | Fax +49 7702 533-433 | info@metz-connect.com
Weitere Dokumentation siehe / additional documentation see / documentation supplémentaire voir www.metz-connect.com

Technical Data

General Data			
Solder pin length	3.25 mm		
min. number of poles	2		
max. number of poles	24		
Insulating material class	CTI 600		
clearance/creepage dist.	4 mm		
Protection category	IP00		
Rated current	10 A		
Overvoltage category	III	III	II
Pollution degree	3	2	2
Rated voltage	320 V	800 V	800 V
Rated test voltage	6 kV	6 kV	6 kV
Approvals			
c UL us V / A	300 / 15		
approval UL - File No.	E121004		
SEV	320 V / 4 kV / 13.5 A / 1.0 x 1.0 mm		
Material			
insulating material	PA66		
flammability class	V0		
contact pin material	CuMg		
contact pin surface	Ni + Ag		
Glow-Wire Flammability GWFI	960 °C acc. to IEC 60695-2-12		
Glow-Wire Flammability GWIT	775 °C acc. to IEC 60695-2-13		
Climatic Data			
upper limit temperature	105 °C		
lower limit temperature	-40 °C		
general			
Tolerance	ISO 2768 -mH		
Solderability	Acc. to JEDEC JESD22-B102E 245°C/5s		
Application note			

© 2026 METZ CONNECT - Technische Änderungen vorbehalten! Subject to modifications! Sous réserve de modifications techniques!

Technical Data

This product is a standard product of METZ CONNECT. METZ CONNECT is not aware of the specific intended use of the goods by the Customer or any customers of the Customer. The Customer guarantees that it has fully and sufficiently tested the use of the goods and any product modifications, product changes or product enhancements with regard to the specific intended use in accordance with the state of the art or in any other way.

© 2026 METZ CONNECT - Technische Änderungen vorbehalten! Subject to modifications! Sous réserve de modifications techniques!

Accessories

P/N	Designation
700024-01-9	Coding star white
700523-0157	Geh_Kappe_swg_Block

© 2026 METZ CONNECT - Technische Änderungen vorbehalten! Subject to modifications! Sous réserve de modifications techniques!

Counterpart of

P/N	Designation
313131	RP035xxHBLC Type 313
313141	RP035xxHBLD Type 314
31314103-08	RP035xxHBLD Typ 314
31314103-09	RP035xxHBLD Typ 314
313491	RP015xxVBLC Type 349
313501	RP015xxSBLC Type 350
ASP045	SP045xxVBNC ASP045
ASP0450222	SP04502VBNC ASP045
ASP0450322	SP04503VBNC ASP045
ASP0450422	SP04504VBNC ASP045
ASP0450522	SP04505VBNC ASP045
ASP0450622	SP04506VBNC ASP045
ASP0450722	SP04507VBNC ASP045
ASP0450822	SP04508VBNC ASP045
ASP0450922	SP04509VBNC ASP045
ASP0451022	SP04510VBNC ASP045
ASP0451222	SP04512VBNC ASP045
SP065XXVBNC	SP065xxVBNC
SP065XXVBPC	SP065xxVBPC
SP995XXVBNC	SP995xxVBNC

© 2026 METZ CONNECT - Technische Änderungen vorbehalten! Subject to modifications! Sous réserve de modifications techniques!

Illustrations

Dimensional drawing as an example

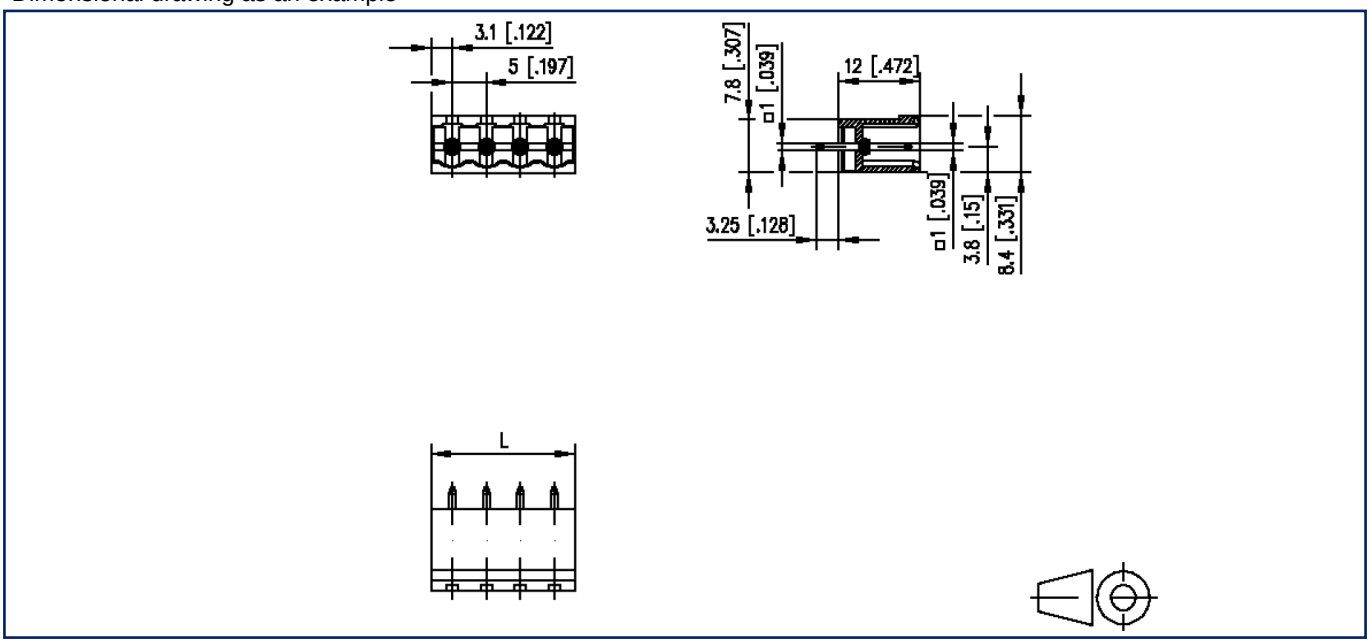

L=(pole size - 1) x centerline + 6.2 mm [0.244]

© 2026 METZ CONNECT - Technische Änderungen vorbehalten! Subject to modifications! Sous réserve de modifications techniques!

Illustrations

Drill pattern as an example

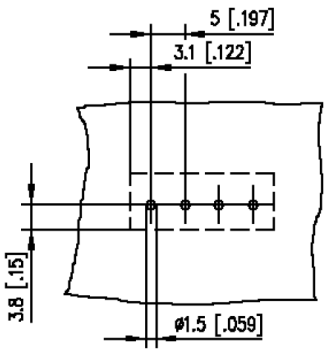

© 2026 METZ CONNECT - Technische Änderungen vorbehalten! Subject to modifications! Sous réserve de modifications techniques!