Data sheet

RP034xxVBLF Type 379

P/N
313791xx
xx=number of poles
2026/11/11
Version: Z

Illustrations

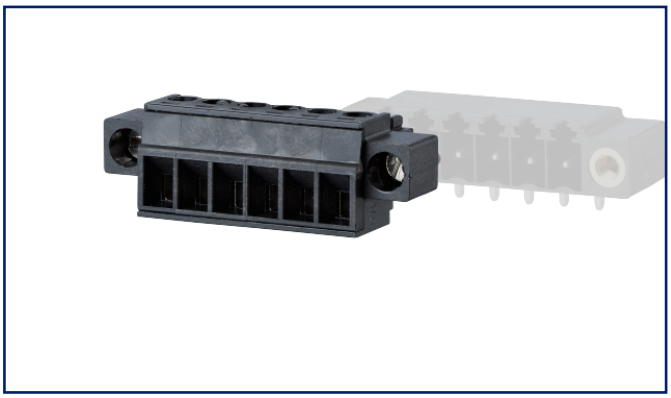

Dimensional drawing as an example

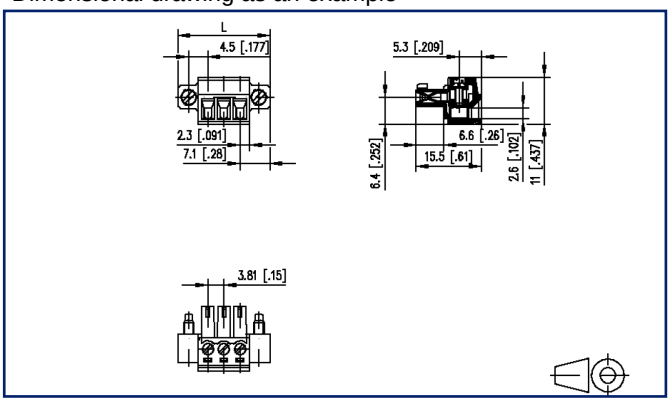

See enlarged drawings at the end of document

Product specification

- screw type terminal block, pluggable
- centerline 3.81 mm, direction of connection vertical 0°
- lift system
- color black, mounting flange
- wire entry codeable side perpendicular to plug direction

METZ CONNECT GmbH | Im Tal 2 | 78176 Blumberg | Germany
Phone +49 7702 533-0 | Fax +49 7702 533-433 | info@metz-connect.com
Weitere Dokumentation siehe / additional documentation see / documentation supplémentaire voir www.metz-connect.com

© 2026 METZ CONNECT - Technische Änderungen vorbehalten! Subject to modifications! Sous réserve de modifications techniques!

P/N
313791xx
xx=number of poles
2026/11/11
Version: Z

Technical Data

General Data			
Tightening torque SEV	0.25 Nm		
Tightening torque UL	2.2 lb-in		
min. number of poles	2		
max. number of poles	24		
Insulating material class	CTI 600		
clearance/creepage dist.	3.5 mm		
Protection category	IP20 with wire connected		
Insul. strip length	7 mm		
Rated current	8 A		
Overvoltage category	III	III	II
Pollution degree	3	2	2
Rated voltage	40 V	250 V	250 V
Rated test voltage	2.5 kV	2.5 kV	2.5 kV
Terminal data			
rat.wiring solid AWGmax	0.08 mm² - 1.5 mm² / AWG 28 - AWG 16		
rat.wiring strand.AWGmax	0.08 mm² - 1.5 mm² / AWG 22 - AWG 16		
Approvals			
c UL us V / A / AWG	300 / 8 / 28 - 16		
approval UL - File No.	E121004		
SEV	160 V / 2.5 kV / 9 A		
Material			
insulating material	PA66		
flammability class	V0		
contact material	CuSn		
Contact surface	Sn		
terminal body thread	M2		
terminal body material	CuZnPb		
terminal body surface	Ni		
screw thread	M2		
screw material	8,8		

© 2026 METZ CONNECT - Technische Änderungen vorbehalten! Subject to modifications! Sous réserve de modifications techniques!

Technical Data

screw surface	Zn Cr(VI)-frei/free
Glow-Wire Flammability GWFI	960 °C acc. to IEC 60695-2-12
Glow-Wire Flammability GWIT	775 °C acc. to IEC 60695-2-13
Climatic Data	
upper limit temperature	105 °C
lower limit temperature	-40 °C
general	
Tolerance	ISO 2768 -mH
Application note	

This product is a standard product of METZ CONNECT. METZ CONNECT is not aware of the specific intended use of the goods by the Customer or any customers of the Customer. The Customer guarantees that it has fully and sufficiently tested the use of the goods and any product modifications, product changes or product enhancements with regard to the specific intended use in accordance with the state of the art or in any other way.

© 2026 METZ CONNECT - Technische Änderungen vorbehalten! Subject to modifications! Sous réserve de modifications techniques!

Counterpart

P/N	Designation
313901	PR044xxHBBF Type 390
313911	PR044xxVBBF Type 391
313921	PT094xxHBBF Type 392
313931	PT094xxVBBF Type 393

© 2026 METZ CONNECT - Technische Änderungen vorbehalten! Subject to modifications! Sous réserve de modifications techniques!

Illustrations

Dimensional drawing as an example

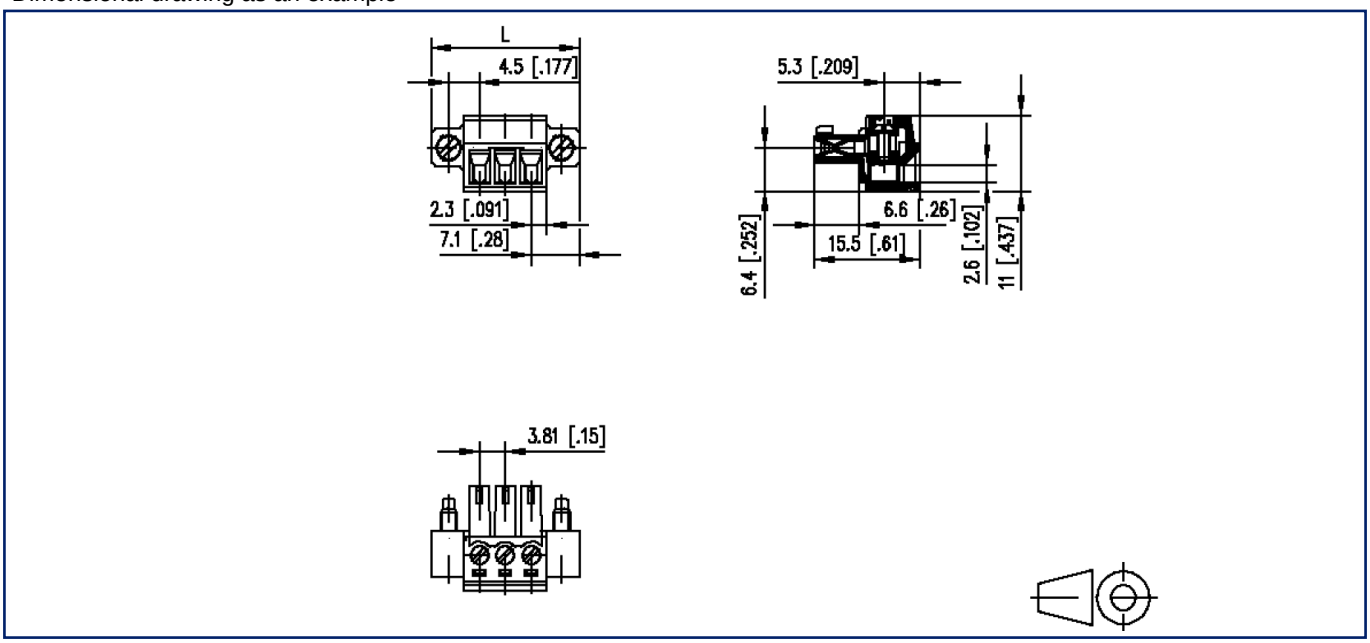

L=(pole size - 1) x centerline + 14.2 mm [0.559]

© 2026 METZ CONNECT - Technische Änderungen vorbehalten! Subject to modifications! Sous réserve de modifications techniques!