Data sheet
Type 360273

P/N 360273

2026/11/12
Version: C

Illustrations



Dimensional drawing as an example

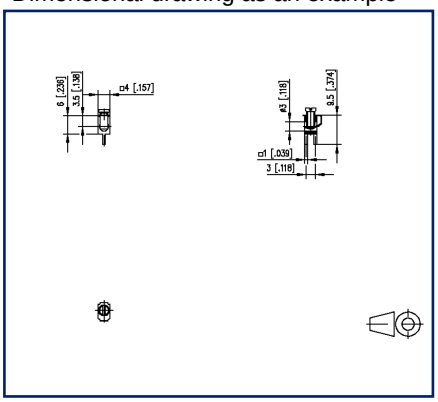

Drill pattern as an example

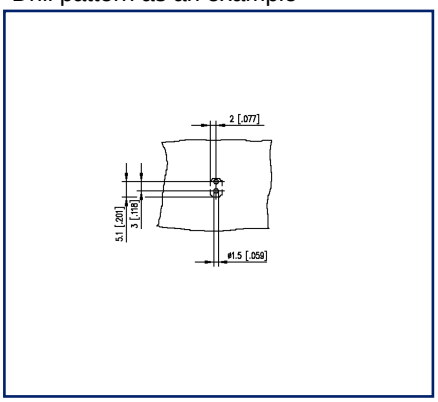

See enlarged drawings at the end of document

Product specification

- screw type terminal block, solderable, double solder pins
- direction of connection 90°
- wire protector
- color metallike
- open construction, screw brought down by hand (transport safety)

© 2026 METZ CONNECT - Technische Änderungen vorbehalten! Subject to modifications! Sous réserve de modifications techniques!

METZ CONNECT GmbH | Im Tal 2 | 78176 Blumberg | Germany
Phone +49 7702 533-0 | Fax +49 7702 533-433 | info@metz-connect.com

Technical Data

General Data	
Tightening torque SEV	0.5 Nm
Tightening torque UL	4.4 lb-in
Solder pin length	3.5 mm
min. number of poles	1
max. number of poles	1
Terminal data	
rat.wiring solid AWGmax	0.13 mm² - 2 mm² / AWG 26 - AWG 14
rat.wiring strand.AWGmax	0.13 mm² - 1.5 mm² / AWG 26 - AWG 14
Approvals	
c UL us A / AWG	15 / 26 - 14
approval UL - File No.	E130077
Material	
terminal body thread	M2.6
terminal body material	CuZnPb
terminal body surface	Ni + Sn
screw thread	M2.6
screw material	4,8
screw surface	Zn Cr(VI)-frei/free
wire protector material	CuSn
wire protector surface	Sn
general	
Tolerance	ISO 2768 -mH
Solderability	Acc. to JEDEC JESD22-B102E 245°C/5s

Application note

This product is a standard product of METZ CONNECT. METZ CONNECT is not aware of the specific intended use of the goods by the Customer or any customers of the Customer. The Customer guarantees that it has fully and sufficiently tested the use of the goods and any product modifications, product changes or product enhancements with regard to the specific intended use in accordance with the state of the art or in any other way.

© 2026 METZ CONNECT - Technische Änderungen vorbehalten! Subject to modifications! Sous réserve de modifications techniques!

Illustrations

Dimensional drawing as an example

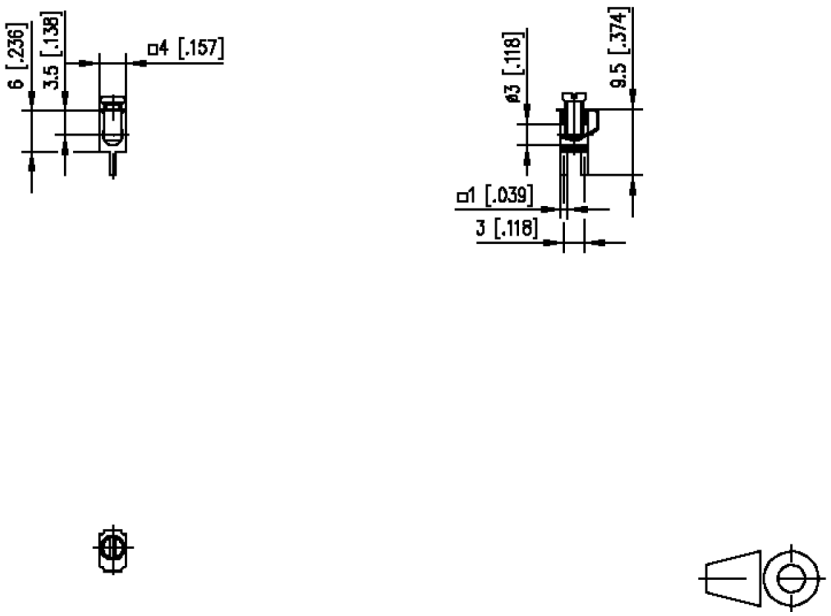

Drill pattern as an example

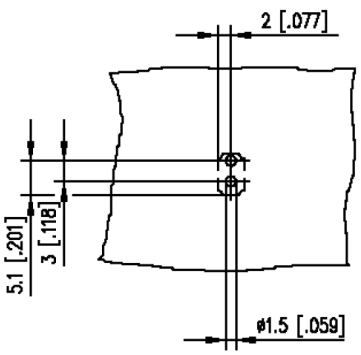

© 2026 METZ CONNECT - Technische Änderungen vorbehalten! Subject to modifications! Sous réserve de modifications techniques!