Data sheet

ST025xxHDNC AST025

P/N
AST025xx04
xx=number of poles
2026/11/18
Version: C

Illustrations

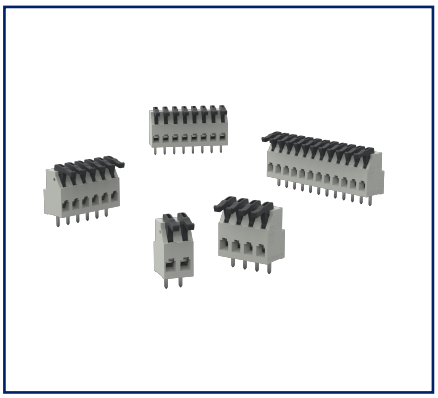

Dimensional drawing as an example

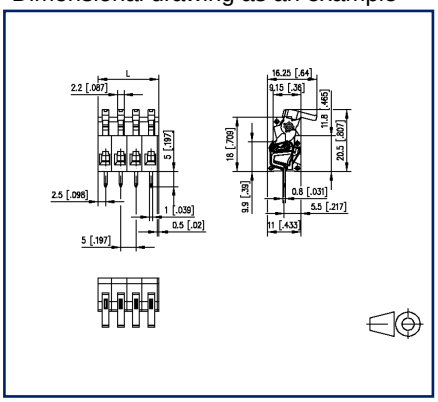

Drill pattern as an example

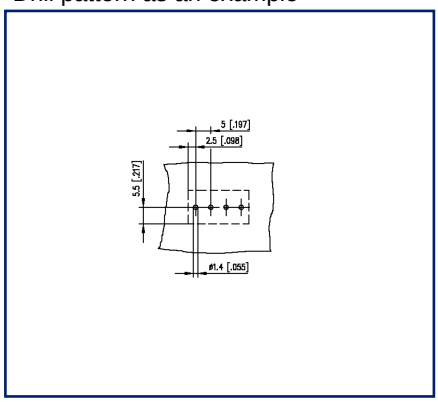

See enlarged drawings at the end of document

Product specification

- spring clamp terminal block, solderable
- centerline 5.00 mm, direction of connection 90°
- fittable without loss of poles
- color gray
- eccentric lever

METZ CONNECT GmbH | Im Tal 2 | 78176 Blumberg | Germany
Phone +49 7702 533-0 | Fax +49 7702 533-433 | info@metz-connect.com
Weitere Dokumentation siehe / additional documentation see / documentation supplémentaire voir www.metz-connect.com

© 2026 METZ CONNECT - Technische Änderungen vorbehalten! Subject to modifications! Sous réserve de modifications techniques!

P/N
AST025xx04
xx=number of poles
2026/11/18
Version: C

Technical Data

General Data			
Solder pin length	5 mm		
Insulating material class	CTI 600		
clearance/creepage dist.	4 mm		
Protection category	IP20		
Insul. strip length	6 mm		
Rated current	12 A		
Overvoltage category	III	III	II
Pollution degree	3	2	2
Rated voltage	40 V	250 V	250 V
Rated test voltage	2.5 kV	2.5 kV	2.5 kV
Terminal data			
rat.wiring solid AWGmax	0.2 mm² - 2 mm² / AWG 28 - AWG 14		
rat.wiring strand.AWGmax	0.2 mm² - 2 mm² / AWG 28 - AWG 14		
Approvals			
c UL us V / A / AWG	300 / 13 / 28 - 14		
approval UL - File No.	E121004		
SEV	250 V / 13.5 A / T60		
Material			
insulating material	PA		
flammability class	V0		
spring material	Spring steel		
contact material	CuSn		
Contact surface	Ni + Sn		
Glow-Wire Flammability GWFI	850 °C acc. to IEC 60695-2-12		
Glow-Wire Flammability GWIT	-		
Climatic Data			
upper limit temperature	105 °C		
lower limit temperature	-40 °C		
general			
Tolerance	ISO 2768 -mH		

© 2026 METZ CONNECT - Technische Änderungen vorbehalten! Subject to modifications! Sous réserve de modifications techniques!

Technical Data

Solderability	Acc. to JEDEC JESD22-B102E 245°C/5s

Application note

This product is a standard product of METZ CONNECT. METZ CONNECT is not aware of the specific intended use of the goods by the Customer or any customers of the Customer. The Customer guarantees that it has fully and sufficiently tested the use of the goods and any product modifications, product changes or product enhancements with regard to the specific intended use in accordance with the state of the art or in any other way.

© 2026 METZ CONNECT - Technische Änderungen vorbehalten! Subject to modifications! Sous réserve de modifications techniques!

Illustrations

Dimensional drawing as an example

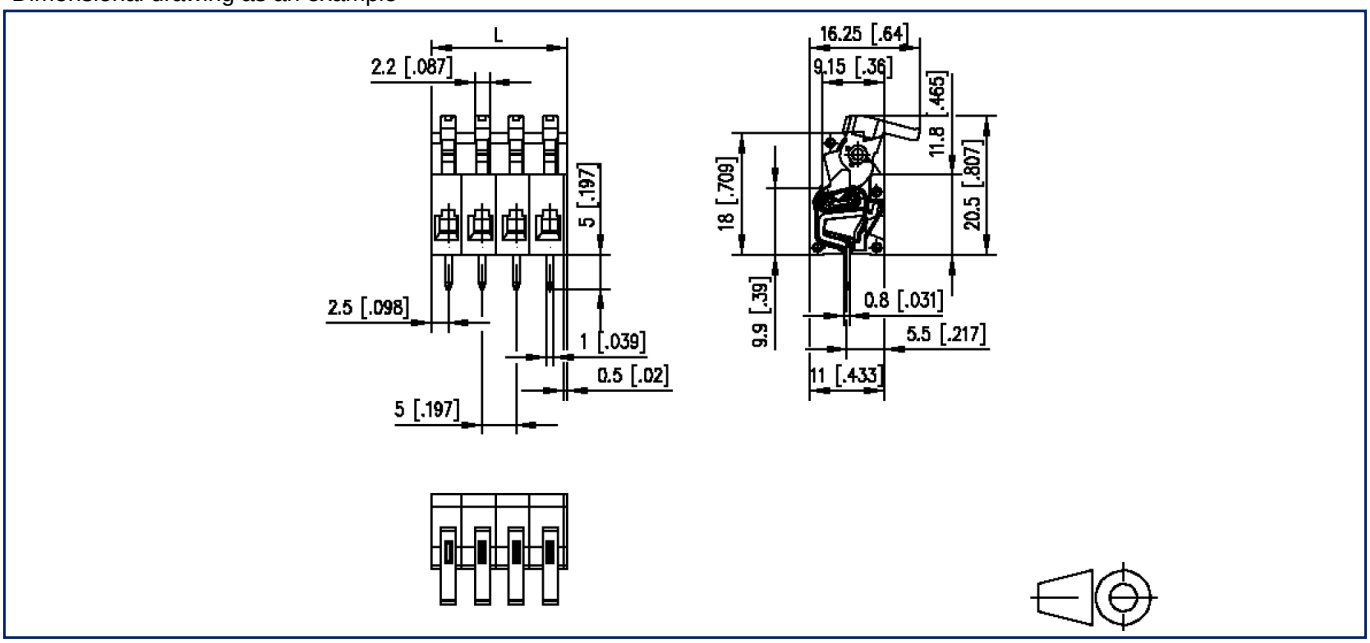

L=(pole size - 1) x centerline + 5 mm [0.197]

© 2026 METZ CONNECT - Technische Änderungen vorbehalten! Subject to modifications! Sous réserve de modifications techniques!

Illustrations

Drill pattern as an example

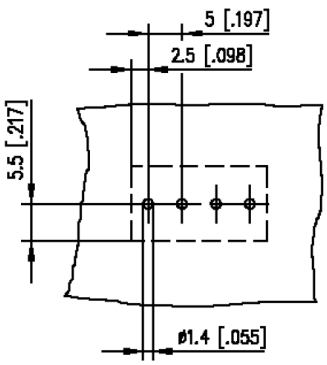

© 2026 METZ CONNECT - Technische Änderungen vorbehalten! Subject to modifications! Sous réserve de modifications techniques!