Data sheet
ST04107DDNN AST041

P/N
AST0410704

2026/11/09
Version: A

Illustrations

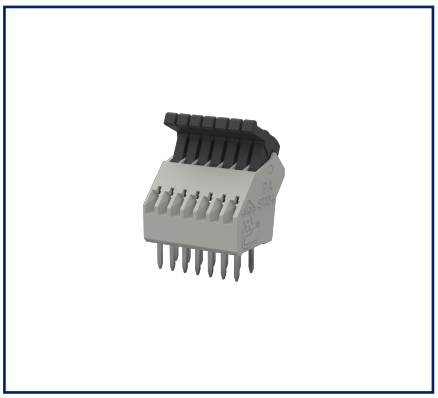

Dimensional drawing as an example

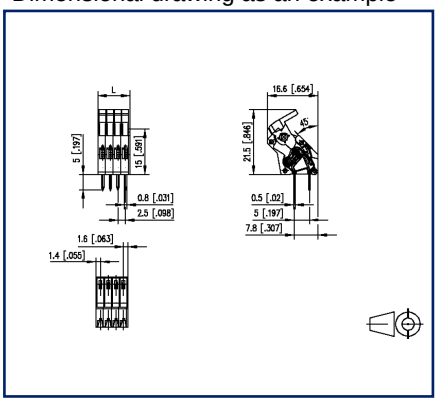

Drill pattern as an example

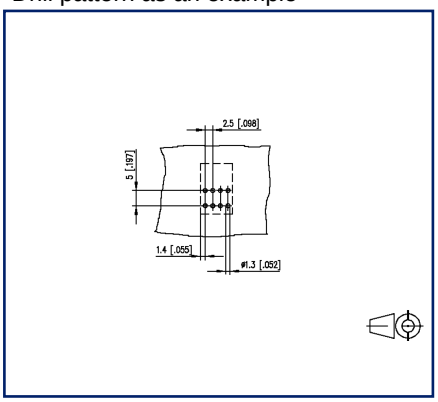

See enlarged drawings at the end of document

Product specification

- spring clamp terminal block, solderable, double solder pins
- centerline 2.50 mm, direction of connection 45°
- color gray
- eccentric lever

© 2026 METZ CONNECT - Technische Änderungen vorbehalten! Subject to modifications! Sous réserve de modifications techniques!

Technical Data

General Data			
Solder pin length	5 mm		
pole size	7		
Insulating material class	CTI 600		
clearance/creepage dist.	1.7 mm		
Protection category	IP20		
Insul. strip length	6 mm		
Rated current	8 A		
Overvoltage category	III	III	II
Pollution degree	3	2	2
Rated voltage	10 V	200 V	200 V
Rated test voltage	2.5 kV	2.5 kV	2.5 kV
Terminal data			
rat.wiring solid AWGmax	0.2 mm² - 0.5 mm² / AWG 28 - AWG 20		
rat.wiring strand.AWGmax	0.2 mm² - 0.5 mm² / AWG 28 - AWG 20		
Approvals			
c UL us V / A / AWG	150 / 8 / 28 - 20		
approval UL - File No.	E121004		
SEV	130 V / 6 A / T60		
Material			
insulating material	PA66		
flammability class	V0		
spring material	Spring steel		
contact material	CuZn		
Contact surface	Ni + Sn		
Glow-Wire Flammability GWFI	850 °C acc. to IEC 60695-2-12		
Glow-Wire Flammability GWIT	775 °C acc. to IEC 60695-2-13		
Climatic Data			
upper limit temperature	105 °C		
lower limit temperature	-40 °C		
general			

© 2026 METZ CONNECT - Technische Änderungen vorbehalten! Subject to modifications! Sous réserve de modifications techniques!

Technical Data

Tolerance	ISO 2768 -mH
Solderability	Acc. to JEDEC JESD22-B102E 245°C/5s

Application note

This product is a standard product of METZ CONNECT. METZ CONNECT is not aware of the specific intended use of the goods by the Customer or any customers of the Customer. The Customer guarantees that it has fully and sufficiently tested the use of the goods and any product modifications, product changes or product enhancements with regard to the specific intended use in accordance with the state of the art or in any other way.

© 2026 METZ CONNECT - Technische Änderungen vorbehalten! Subject to modifications! Sous réserve de modifications techniques!

Illustrations

Dimensional drawing as an example

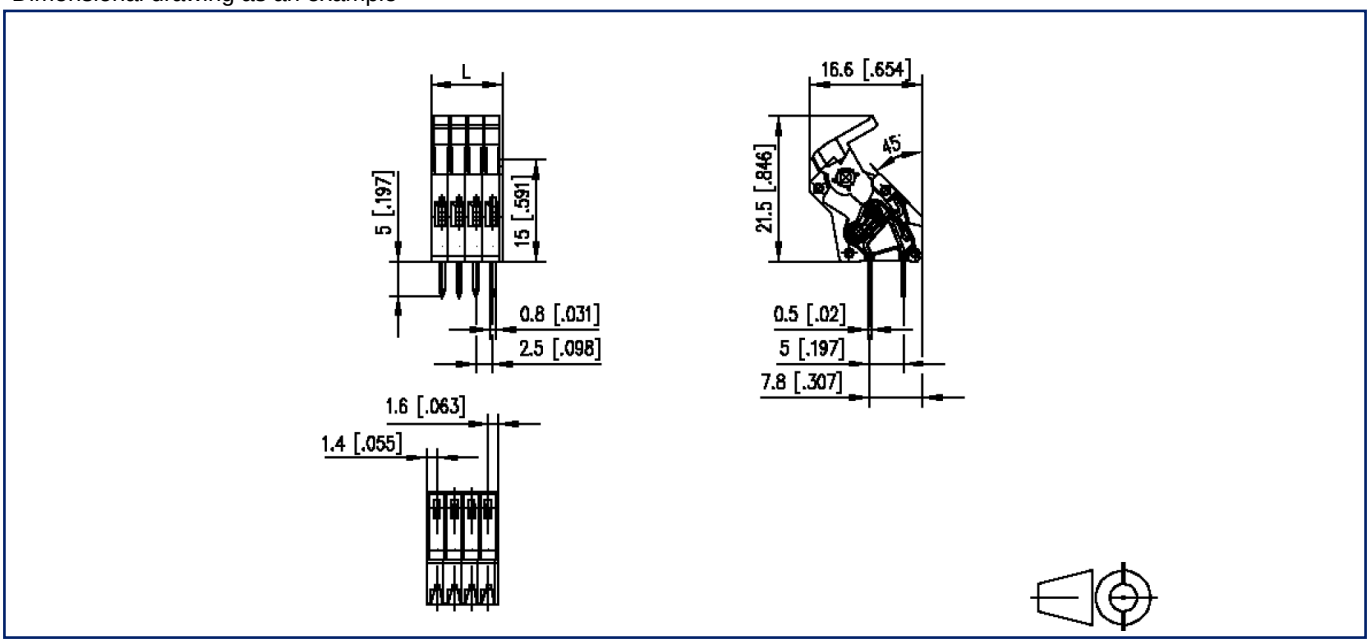

L=(pole size - 1) x centerline + 3 mm [0.118]

© 2026 METZ CONNECT - Technische Änderungen vorbehalten! Subject to modifications! Sous réserve de modifications techniques!

Illustrations

Drill pattern as an example

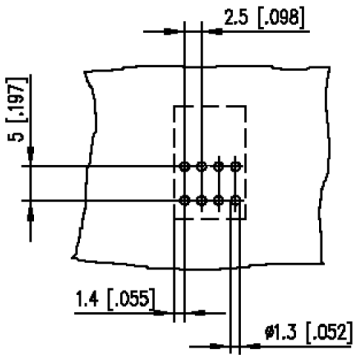

© 2026 METZ CONNECT - Technische Änderungen vorbehalten! Subject to modifications! Sous réserve de modifications techniques!